Assembly guidance Pleated Cordlock

planeo

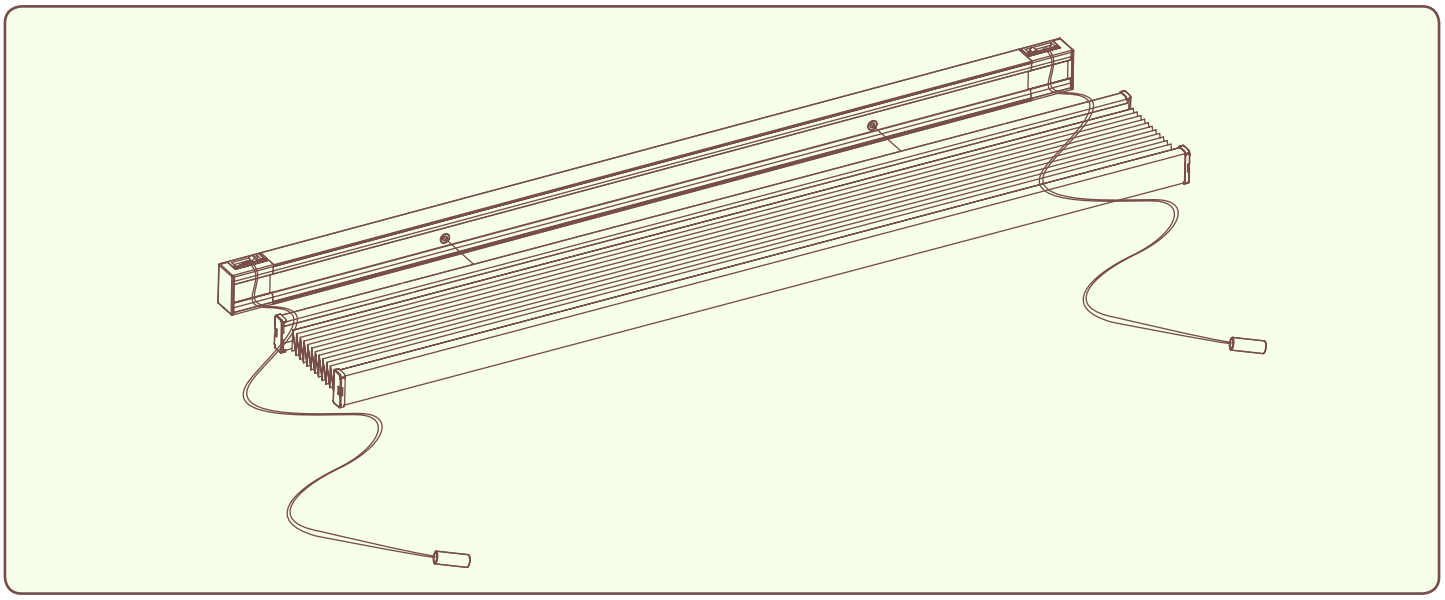

0- 80 cm: 2 x
81-140 cm: 3 x
141-180 cm: 4 x

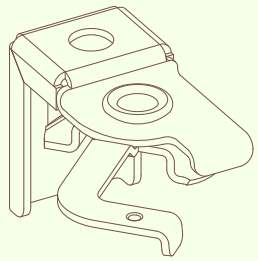

0- 80 cm: 6 x
81-140 cm: 7 x
141-180 cm: 8 x

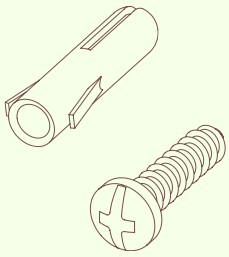

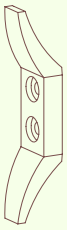

2 x

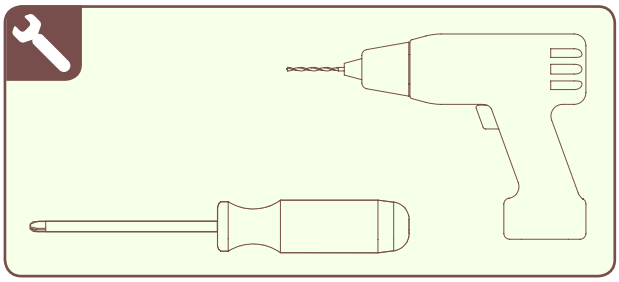

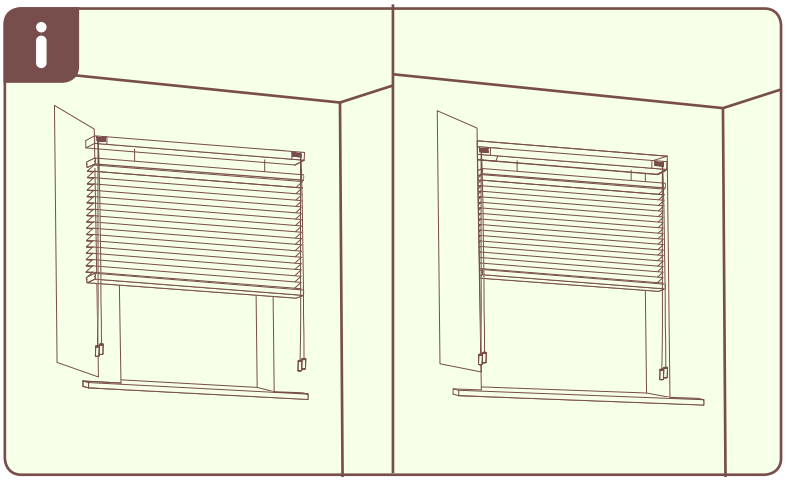

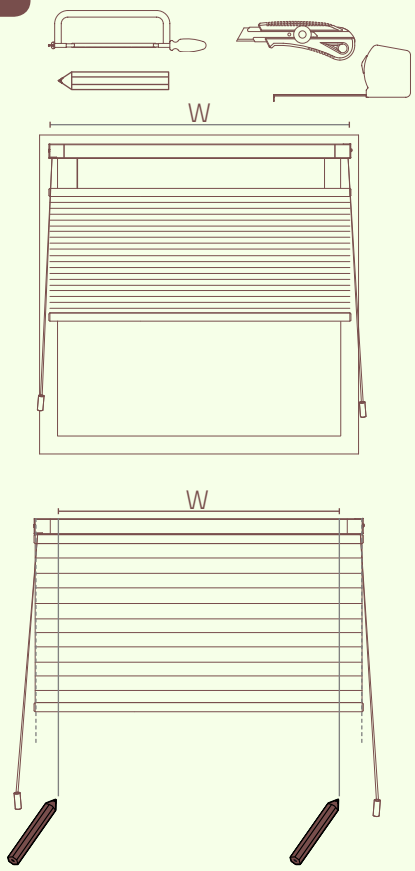

W	X max	W min
400	40	320
600	110	380
800	110	580
1000	110	780
1200	110	980
1400	110	1180
1600	110	1380

1

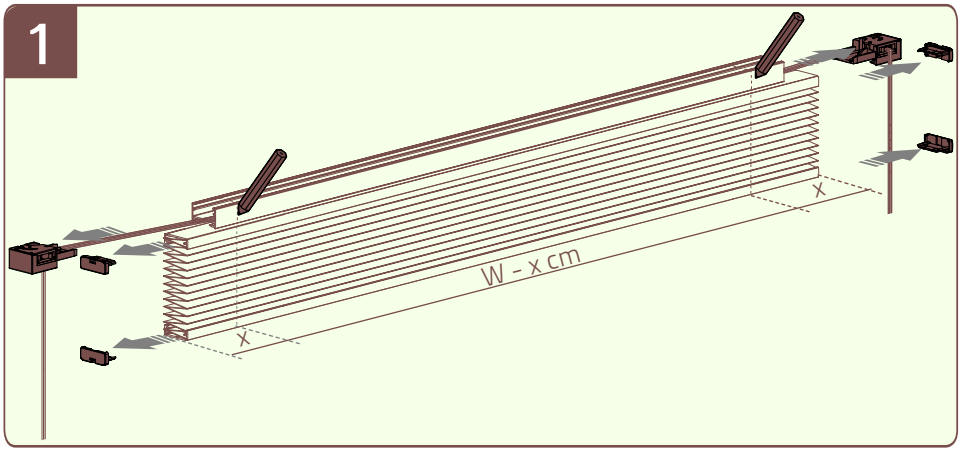

2

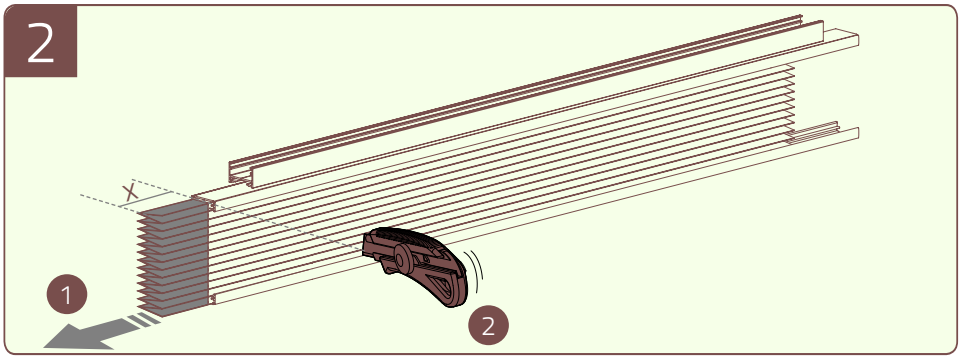

3

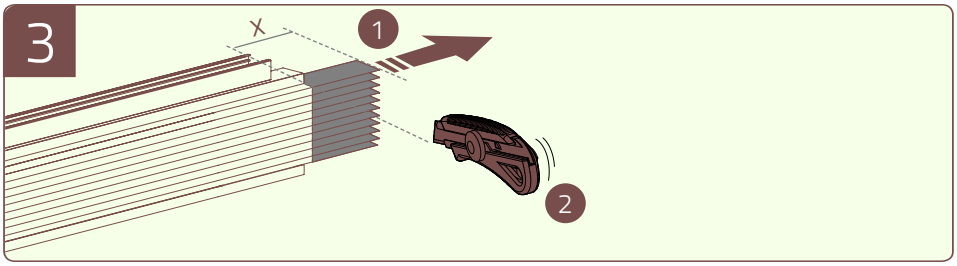

4

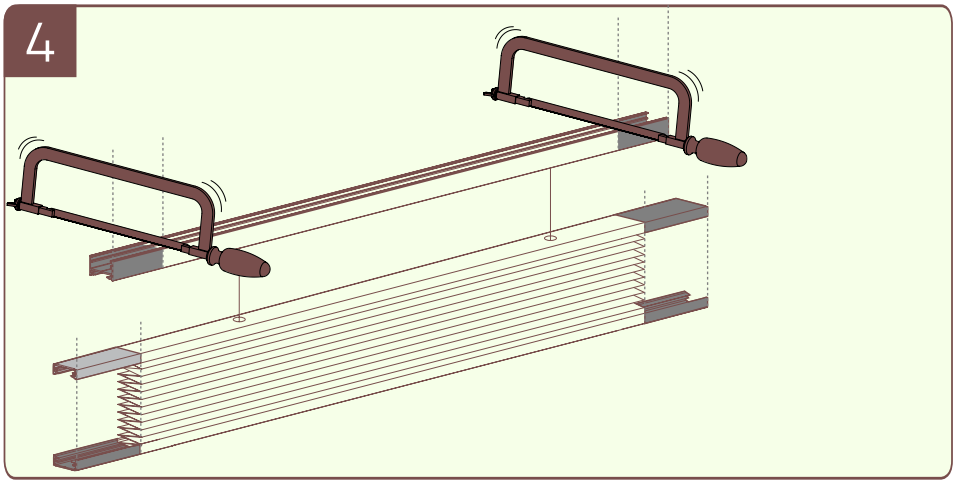

5

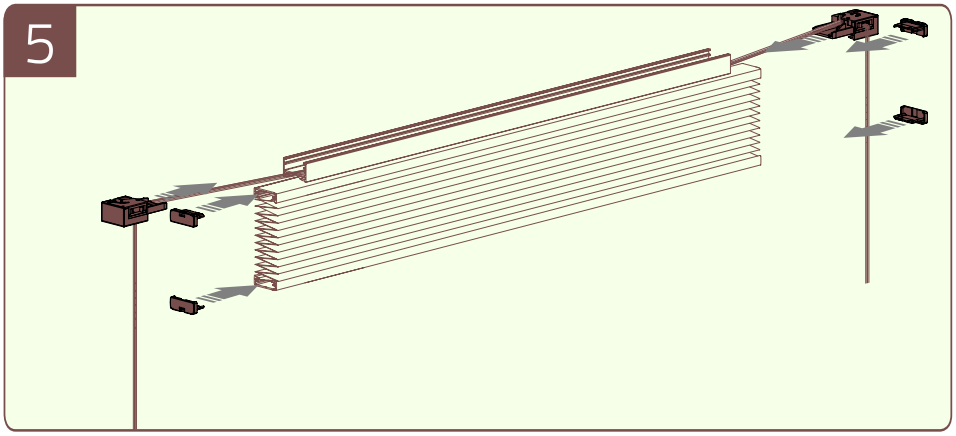

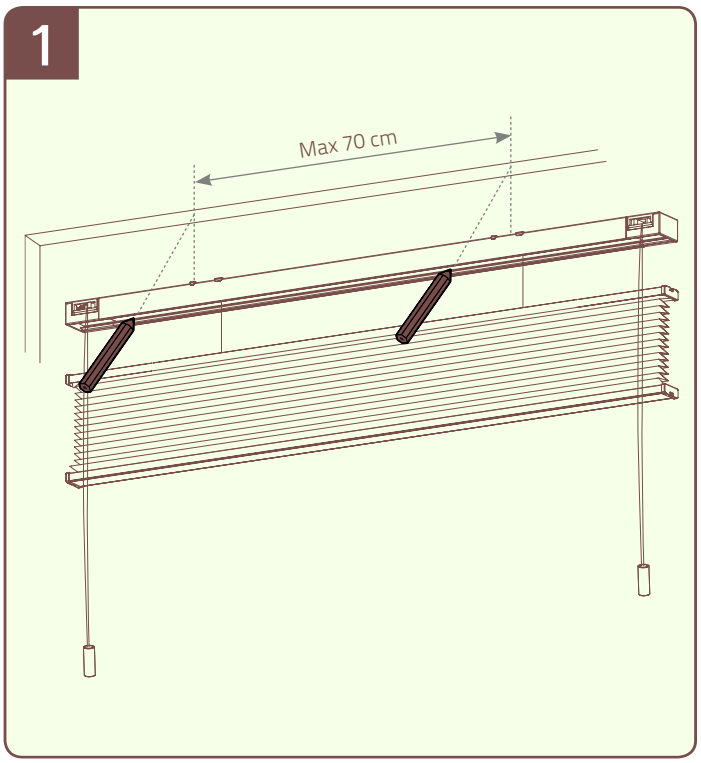

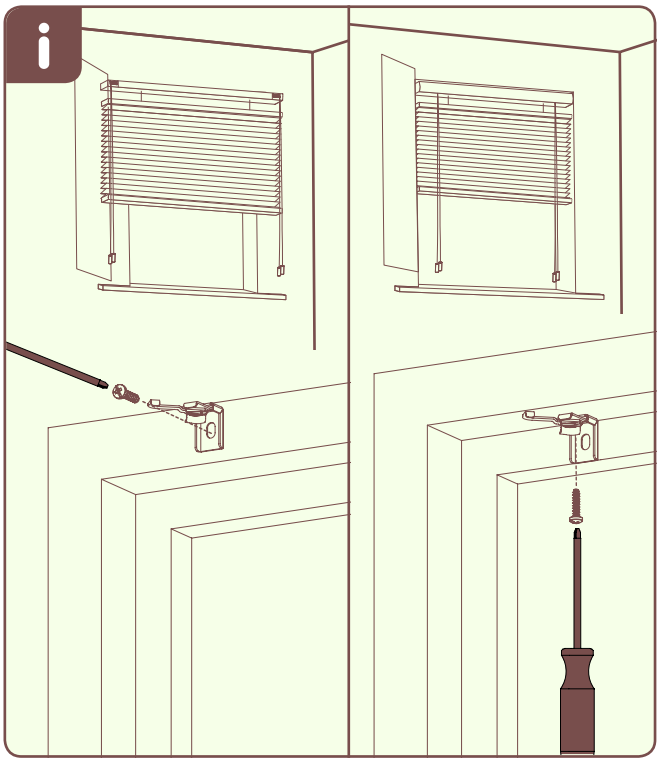

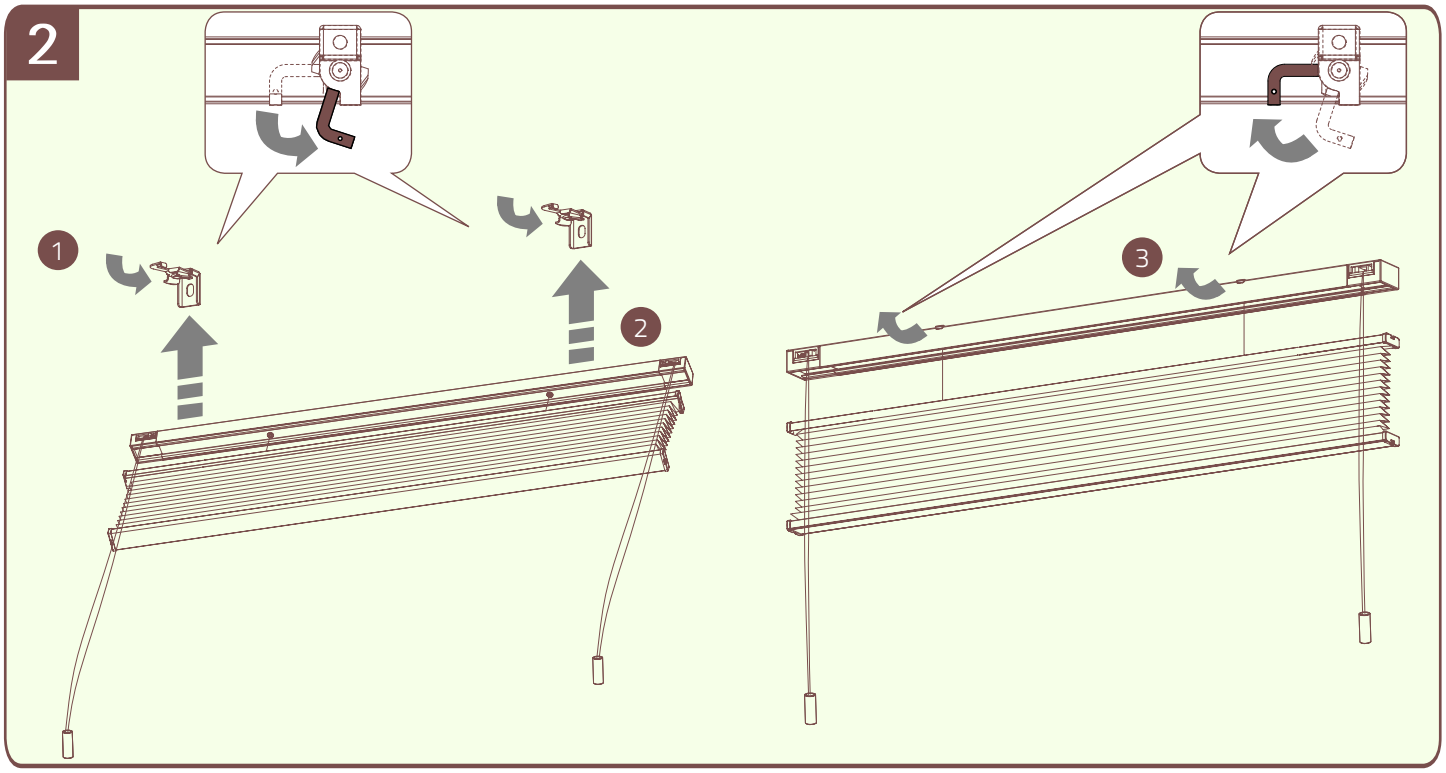

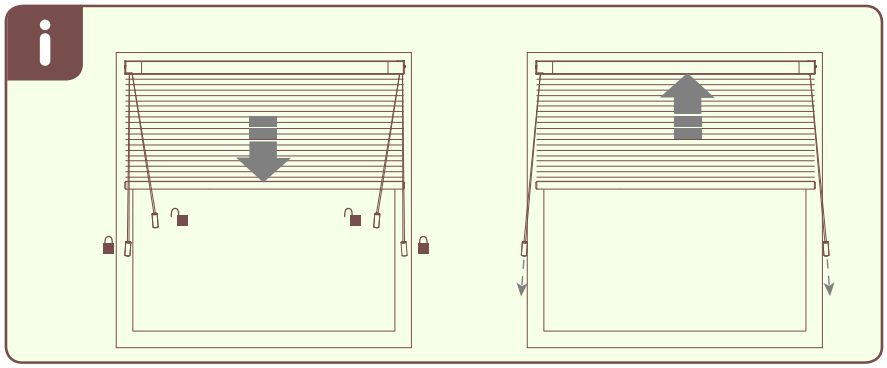

planeo

Impressum / Imprint